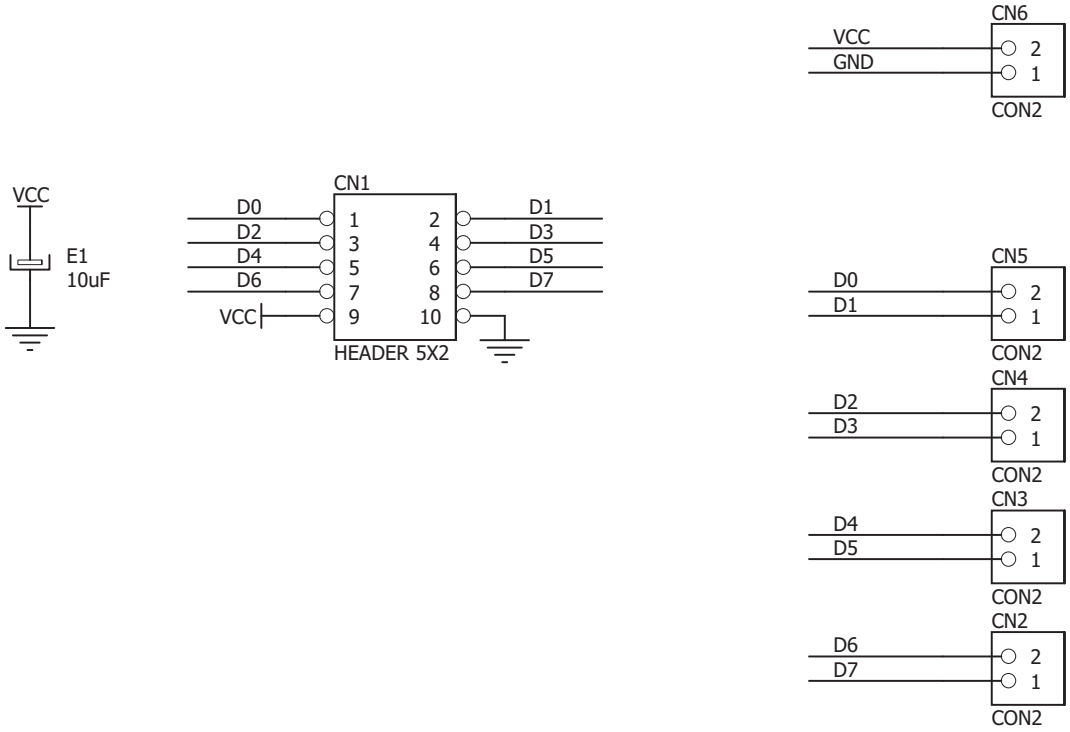

MikroElektronika Development systems