I2C MUX 9 Click schematic v100

MIKROE
Time-saving embedded tools

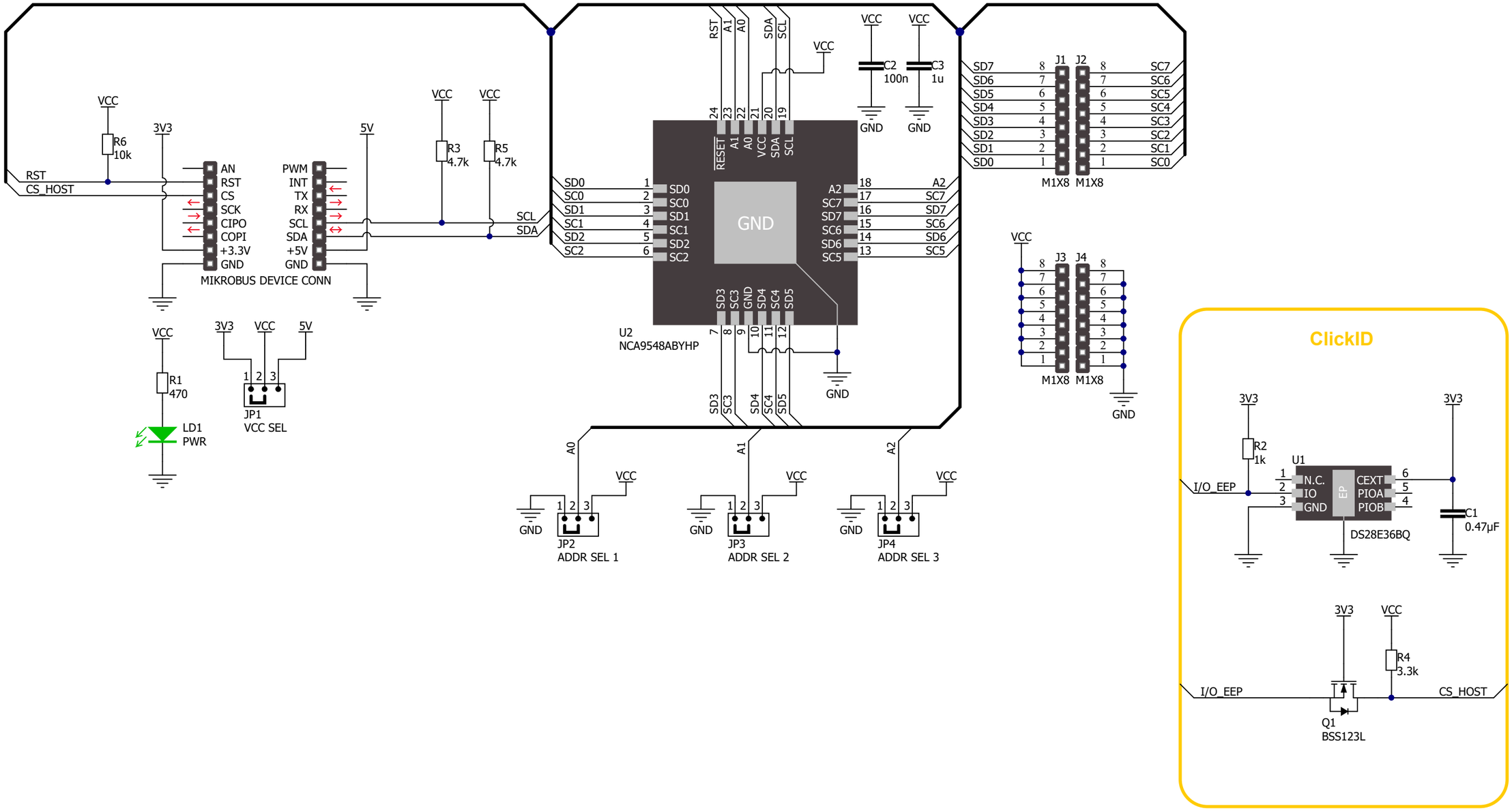

www.mikroe.com

MIKROE assumes no responsibility for any errors or inaccuracies that may appear in the present document.
Specification and information contained in the preset schematic are subject to change at any time without notice. Copyright©2025 MIKROE. All rights reserved.