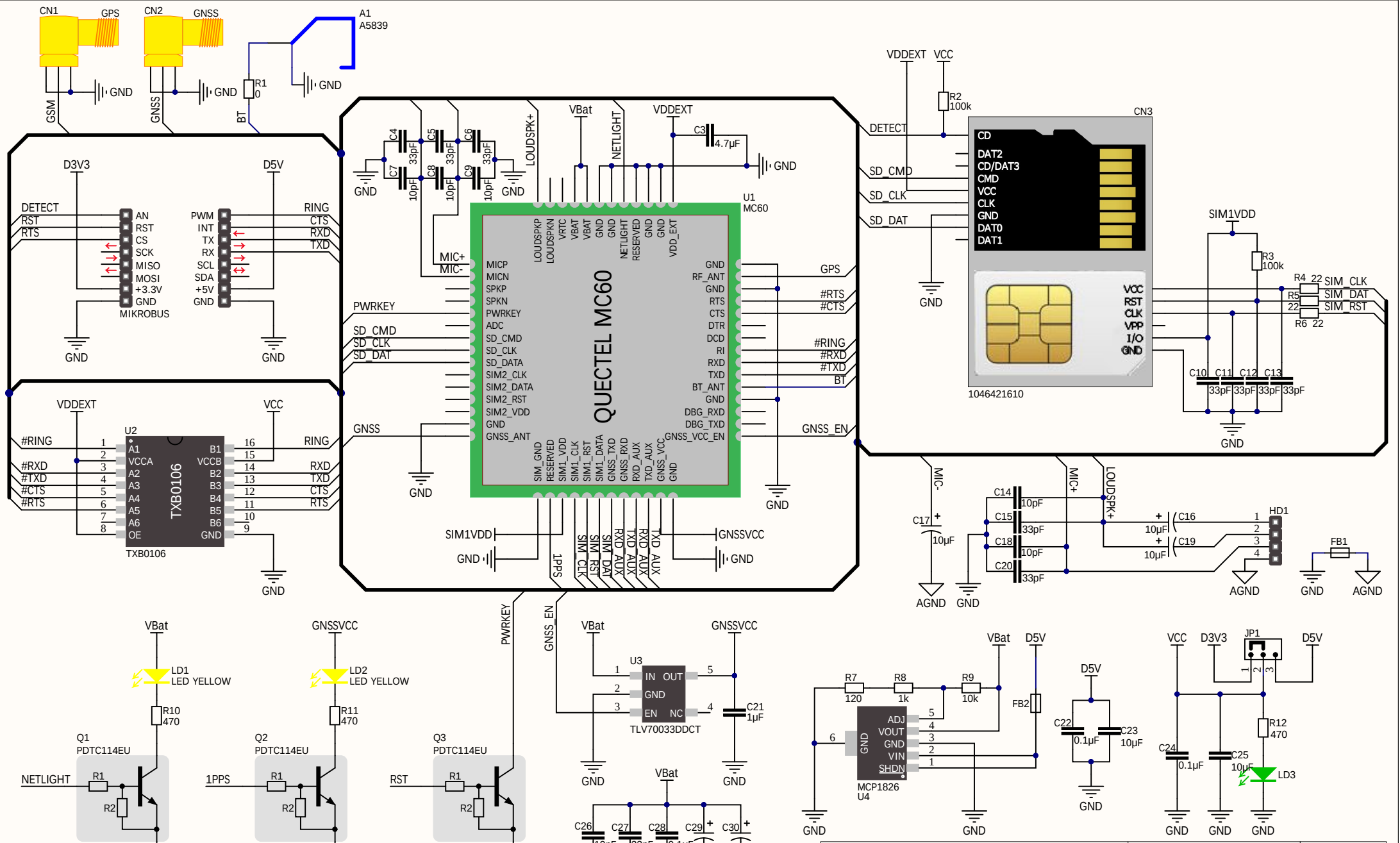

Title: **GPS/GNSS Click**		MikroElektronika Batajnicki drum 23 11186 Zemun, Belgrade Serbia
Author: Dalibor Buljovcic	Revision: 1.0	
Date: 9/22/2016 Time: 11:23:07 AM	Sheet 1 of 1	
File: D:_Projects\GSM_GLONASS Click\20160922\GSM_GLONASS Click\DesigneFiles\GSM_GNSS Click.SchDot		